123Open

123Open module installation guide

Connecting the power supply and the controls of your gate motor

Before you begin

We strongly recommend having the installation carried out by a professional installer. The connection is made on the electronic board of your gate motor: a wiring mistake can damage the 123Open module, the gate motor or its accessories.

Webspot SAS cannot be held liable for any damage, direct or indirect, resulting from an installation or handling that does not comply with this guide or with your gate motor's manual, whether to the 123Open module, to the gate motor or to any other equipment. **If you carry out the installation yourself, you do so entirely at your own risk.** Working on the gate motor may also affect its warranty: check with its manufacturer.

- Switch off the power supply to the gate motor (circuit breaker) before any work, and only restore it once all connections are complete.
- Keep your gate motor's manual at hand: it shows where the accessory power output and the control inputs are located.
- The gate motor's safety devices (photocells, safety edges, etc.) must remain connected and working.

1. Connect the power supply

The module is powered from the **accessory power output** of your gate motor (the one that powers the photocells, for example).

Direct current only, from 9 to 48 V. Check in the manual that the output is direct current: it is marked "DC", "Vdc" or ⎓.

An alternating current output ("AC", "Vac" or ~), even at 24 V, is not suitable. Never connect the module to 230 V.

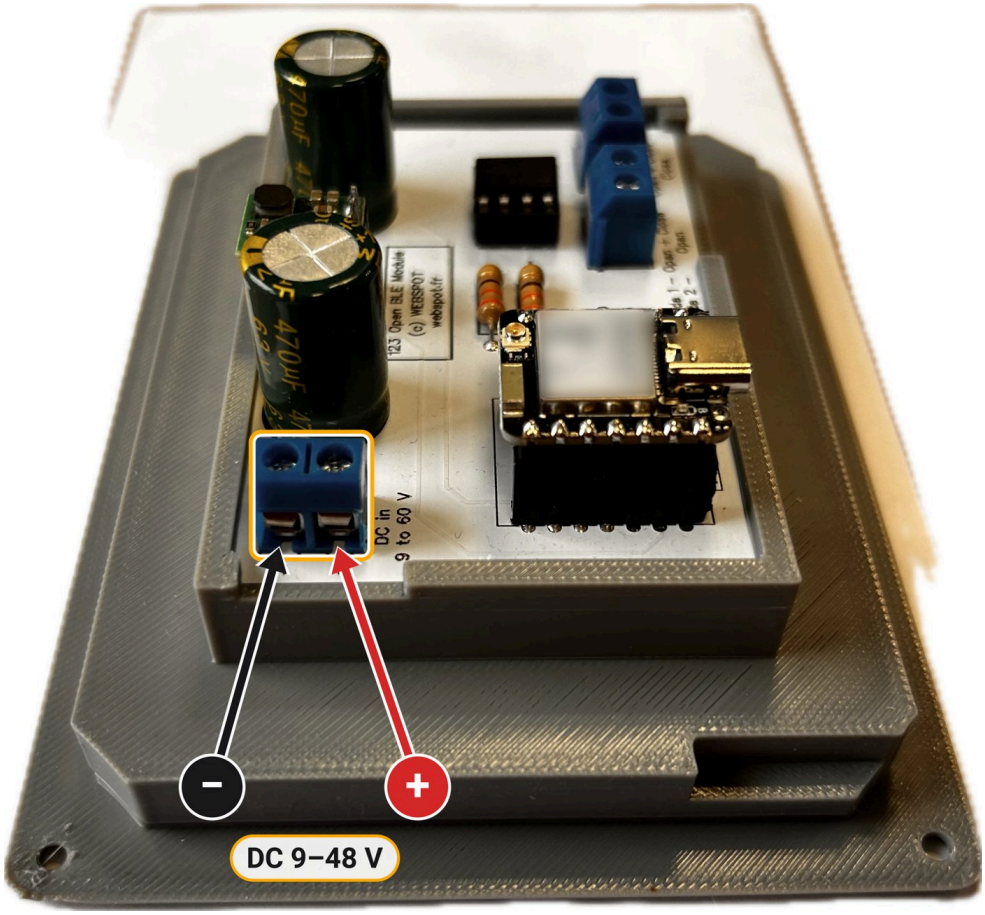

Power terminal block: **−** on the left, **+** on the right.

1. On the gate motor, locate the **+** terminal and the **−** terminal (or 0 V, GND) of the accessory output.
2. Strip 5 to 6 mm of insulation from each wire.
3. Insert the wire coming from **−** into the **left** input of the "DC in" terminal block, and the wire coming from **+** into the **right** input. Tighten the screws, then gently pull on each wire to check that it holds.

> **Observe the polarity.** Reversing + and − can damage the module. If in doubt, check the voltage and its polarity with a multimeter before connecting the module.

Recommended cable: a 6-conductor alarm cable (6 × 0.22 mm²), which is enough for the power supply and both controls.

2. Connect the gate control

The two control terminal blocks are **dry contacts**: they supply no voltage, they simply close a circuit, as a push button would. They connect to the gate motor's **control inputs**, the ones intended for a push button or a remote control receiver. Each terminal block has two wires, with no polarity. Your gate motor works in one of the following two modes.

Mode 1: a single control (open + close)

The gate motor has only one control input: each pulse in turn opens, stops or closes the gate. This input is often called "step-by-step", "PP", "START", "Step" or "K".

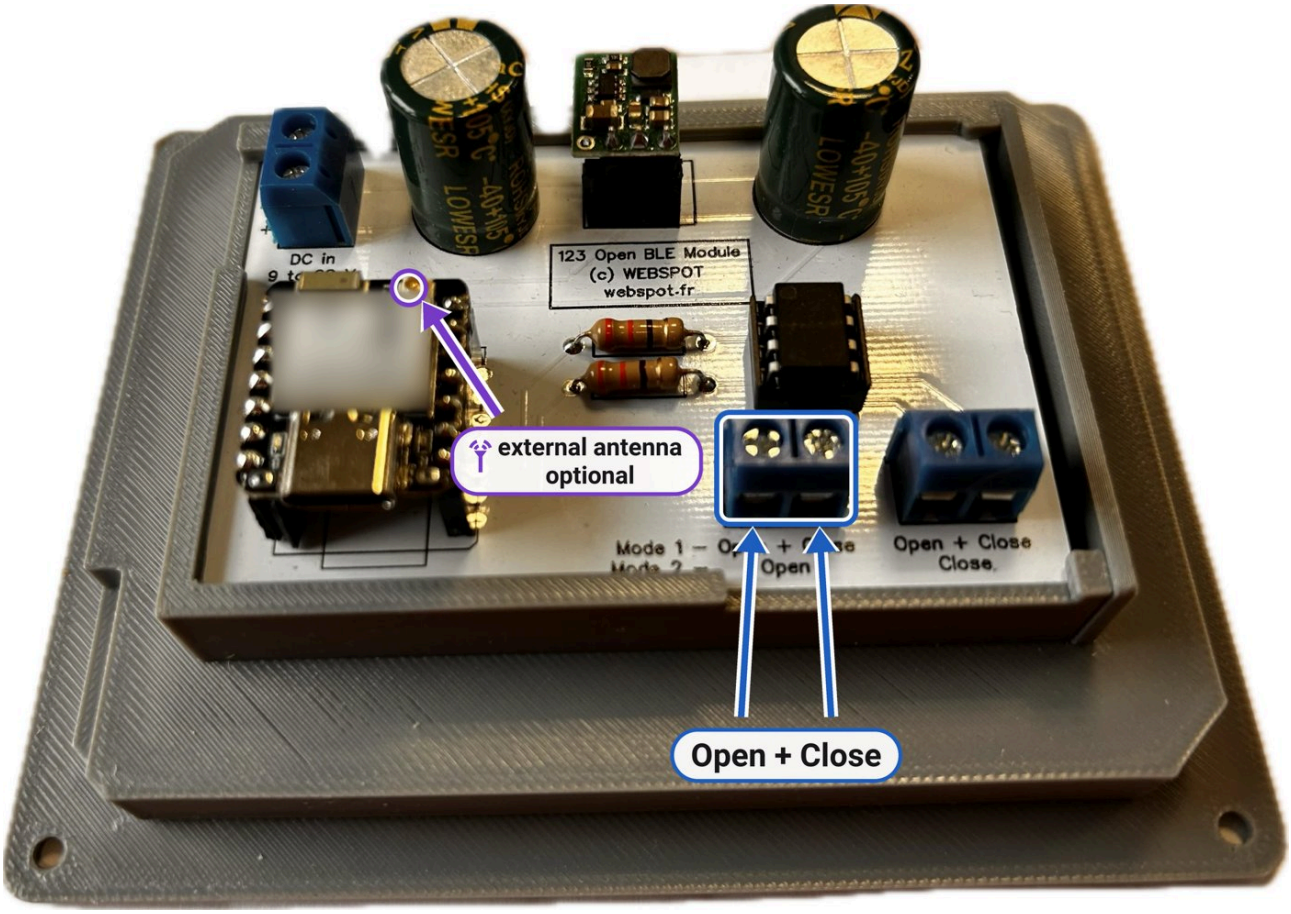

Mode 1: connect the middle terminal block to the control input and to its common (COM).

In the app: **Settings > Gate type > Single contact**.

Mode 2: separate open and close

The gate motor has two separate inputs, one to open ("OPEN") and one to close ("CLOSE").

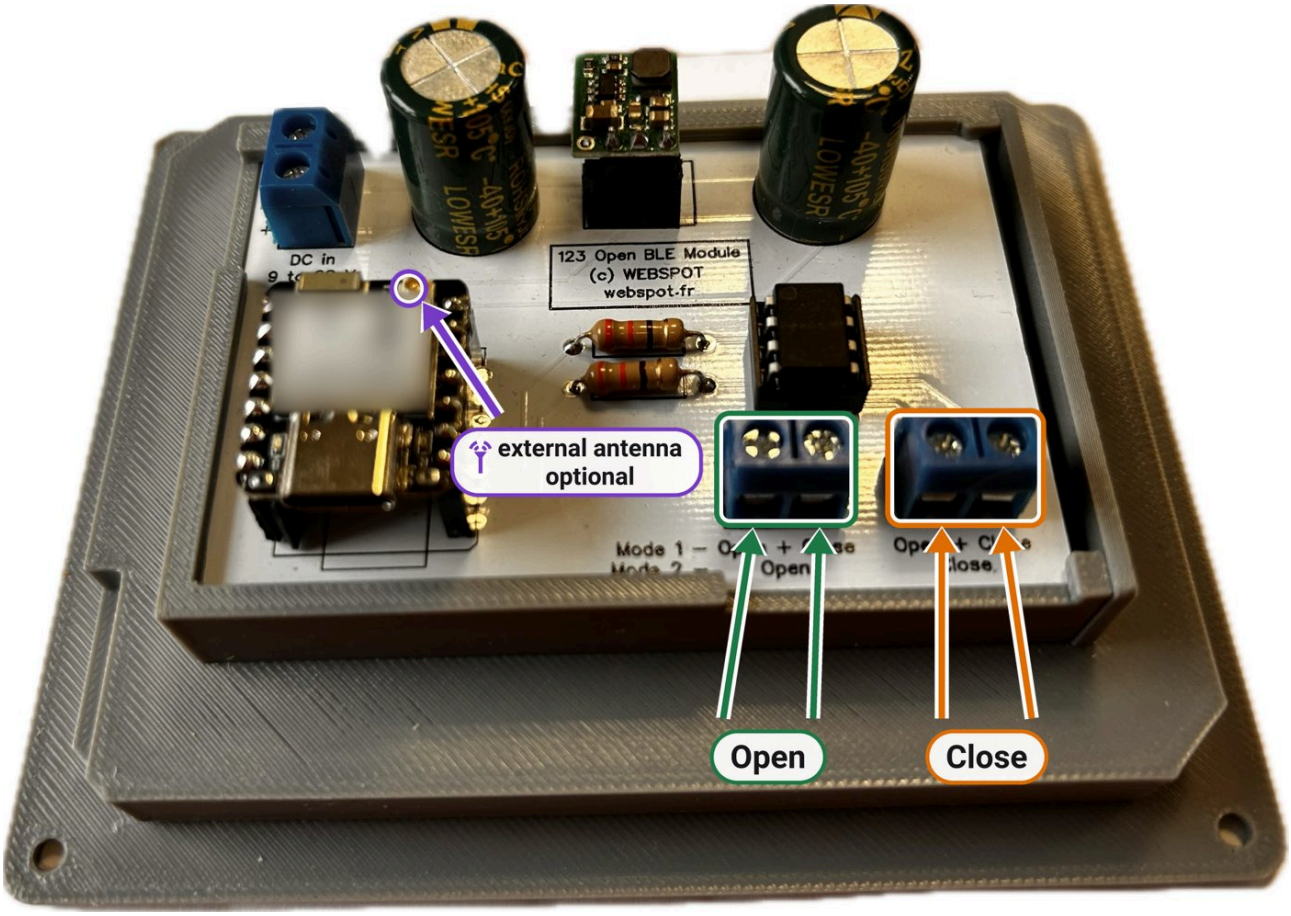

Mode 2: middle terminal block to the open input, right terminal block to the close input.

- Middle terminal block (**Open**): to the open input and the common (COM).
- Right terminal block (**Close**): to the close input and the common (COM).
- If the gate motor has only one common terminal, connect one wire from each of the two terminal blocks to it.

In the app: **Settings > Gate type > Two contacts**.

3. External antenna (optional)

If the module is installed in a metal box or far from where you control the gate, an external antenna improves the Bluetooth and Wi-Fi range. Clip it onto the small round connector on the module (u.FL connector, visible in the photos above), then enable it in the app: **Settings > External antenna**. The module restarts to apply the setting.

4. Commissioning

1. Check the power polarity one last time, then restore power to the gate motor.
2. Open the 123Open app near the gate: the module appears in the list.

3. Sign in with the default code **0000**, then choose your own administrator code and the name of the gate.
4. Set the gate type (mode 1 or mode 2), then run an opening test while watching the gate.

Having trouble? See the Support page.

Simple gate access, no subscription

© 2026 Webspot SAS · contact@webspot.fr